SISTEMI MAGNETICI ELETTROPERMANENTI - Divisione stampaggio

*PERMANENT ELECTRO-MAGNETIC SYSTEMS - Moulding division*

SYSTÈMES MAGNÉTIQUES ÉLECTROPERMANENTS - Section moulage

*ELEKTROPERMANENTE MAGNETSYSTEME - Abteilung Formstanzen*

ITALIANO

ENGLISH

FRANÇAIS

DEUTSCH

# QUAD-PRESS

Press-Tec

QUAD STAMP

**Uso, manutenzione e installazione**

**Use, maintenance and installation manual**

**Emploi, entretien et installation**

**Installations- Bedienungs- und Wartungsanleitung**

TÜV SÜD

Nr. 50 100 7816

TECNOMAGNETE®

# CONTENTS


GENERAL INFORMATION .....4

**0 FOREWORD** .....5

**1 TRANSPORT AND HANDLING** .....5

**2 SYSTEM DESCRIPTION** .....6
- 2.1 Advantages .....6
- 2.2 Operating function .....6
- 2.3 Rated technical characteristics of the magnetic system .....8
- 2.4 Supply general description .....8
- 2.5 Identification data .....10
- 2.6 Component description .....11
- 2.7 Controller technical features .....12
- 2.8 Electric cables .....13
- 2.9 Control pushbutton panels .....15
- 2.10 Safety devices .....30
- 2.11 Rated technical features of the controller operation .....31

**3 INSTALLATION** .....32
- 3.1 Inspection of purchased product .....32
- 3.2 Electric connection .....32
- 3.3 Installation of the magnetic system .....32

**4 EQUIPMENT ORDINARY USE** .....34
- 4.1 Mould clamping procedure.....34
- 4.2 Technical operating description of the applied forces .....35
- 4.3 Mould removal procedure.....36
- 4.4 Safety rules.....37
- 4.5 Procedure to release the mould .....38

**5 MAINTENANCE** .....39
- 5.1 Foreword .....39
- 5.2 Safety rules during maintenance .....39
- 5.3 Periodical maintenance .....39

**6 TROUBLESHOOTING AND CORRECTIVE ACTIONS** .....40

**7 DISMANTLING** .....41
- 7.1 Storage .....41
- 7.2 Putting out of service .....41

**8 WARRANTY**.....42

**9 TECNOMAGNETE SUPPORT CENTRES** .....43



Edition: 05-11
Replaces: 06-10


ENGLISH

## GENERAL INFORMATION

We want to thank you for choosing one of **TECNOMAGNETE' s S.p.A.** products.

This manual will help you to improve the knowledge of your new product.
We recommend reading carefully the following pages and always observing the advices written in this manual.
For further information about the system, apply to **TECNOMAGNETE S.p.A.** Customer Care Service

ENGLISH

### IMPORTANCE OF THIS MANUAL

The following USE, MAINTENANCE AND INSTALLATION MANUAL is to be considered as an integral part of the machine.
It should be kept throughout the machine lifetime.
Make sure that any document relevant to the machine is enclosed within the manual.
The manual must always be transferred to the new owner of the system if the latter is sold.

### MANUAL PRESERVATION

Use this manual correctly to avoid damaging it.
Do not remove, tear or rewrite any page of this manual.
Keep it in a safe area, away from heat and humidity.

The descriptions and illustrations in the manual are not to be considered as binding.

Although the main features of the machine described in this manual are not subject to change, **TECNOMAGNETE S.p.A.** reserves the right to change those components, details and accessories it deems necessary to improve the machine to meet manufacturing or commercial requirements, at any time and without updating this manual immediately.

The manual is property of **TECNOMAGNETE S.p.A.** The reproduction of any part of it, in any given form, without prior written authorization from the manufacturer, is strictly forbidden.
Every product change must be agreed upon with the company.

# 0 FOREWORD

**WARNING**

**The machine original configuration must not be modified in any way.**

Using the equipment in a way different from the one indicated by the manufacturer can damage the equipment and injure the operator.
To work with special materials, different from the ones indicated in this manual, ask for the manufacturer prior authorization.

**SYMBOLS USED**

Operations which might be **dangerous** if not performed correctly

Operations which must be performed by **trained and authorized personnel** in order to avoid possible risks

ENGLISH

# 1 TRANSPORT AND HANDLING

The QUAD-PRESS system can be transported in wooden cases. To make handling operations easier, the packing can be fastened to a pallet.

**WARNING**
I The staff in charge of handling the load should wear **protective gloves** and **safety shoes.**

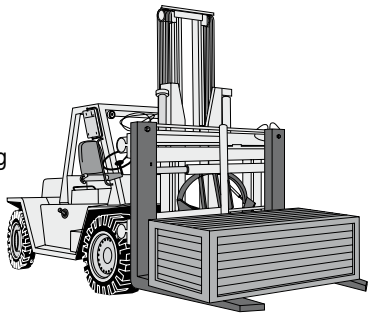

**WARNING**
While lifting or handling the machine, clear the working area, leaving a sufficient safety area around it to avoid damaging people, animals or objects that could be inside of it.

**WARNING**
Follow the instructions on the packing before opening it.

**WARNING**
The storage temperature must remain between 0 °C (32 °F) ÷ +55 °C (131°F).

**KEEP THE ORIGINAL PACKING FOR POSSIBLE FOLLOWING HANDLINGS**

# 2 SYSTEM DESCRIPTION

## 2.1 Advantages

The magnetic mould clamping system offers the following advantages:

1) the time required to change the moulds is remarkably reduced. This allows savings of operation set up times;
2) unlike the traditional systems, it allows the moulds to be clamped and changed without using adapter plates;
3) it clamps moulds with projecting elements without any particular device;
4) Clamping is carried out using a limited amount of power during the enabling/disabling phases only and the operation generally requires less than 5 seconds;
5) it requires no additional fastening after some injections;
6) it is clean and checkable and it requires no periodical maintenance and consequently no machine downtime;
7) **The most interesting advantage derives however from the fact that the clamping force is distributed consistently along the whole mould surface as compared to when single clamping points are used.** This prevents the mould from being deformed during the critical extraction phase, preserves its conditions, enables a larger number of moulding operations to be carried out **and ensures extraordinarily accurate and high quality moulding results;**
8) It enables to clamp moulds with greater dimensions as compared to the machine workbench, thus also enhancing the performance of the mould.

## 2.2 Operating function

The remarkable clamping force of the permanent electro-magnetic system is ensured by a closed circuit constituted by a series of independent poles with alternating polarisation (North/South). The ferromagnetic supporting frame enables the circulation of the magnetic flux on all surfaces. The item to be clamped is positioned along the magnetic system contact surfaces and acts as a connecting bridge between the SOUTH and NORTH poles, creating a magnetic flow that securely clamps it in place.

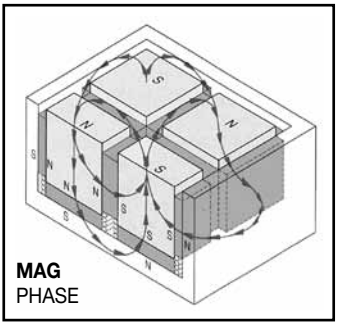


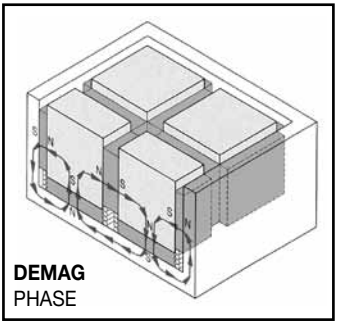

**The four main factors regulating the magnetic clamping are:**

**1) Material • 2) Surface • 3) Air gap • 4) Available magnetic force**

**1) Material**
The material to clamp must have an adequate magnetic conductivity and thickness. The material with the highest magnetic conductivity is mild steel. The following reduction factors apply to mould-carrier plates in other materials: alloyed steel = 0.8; high-carbon steel = 0.7.
The magnetic field expresses its full force when it closes within the item to clamp.

**2) Surface**
The magnetic clamping force is in kg/cm$^2$, and consequently it is proportional to the mould surface coming in touch with the magnetic platen.

**3) Air gap**
The air gap stands for the average distance of the mould surface from the magnetic platen. The magnetic flux intensity is proportional to the current air gap (concavity, convexity etc.). See picture FORCE/AIR GAP.

**4) Magnetic force**

**CURVE FORCE/AIR GAP**

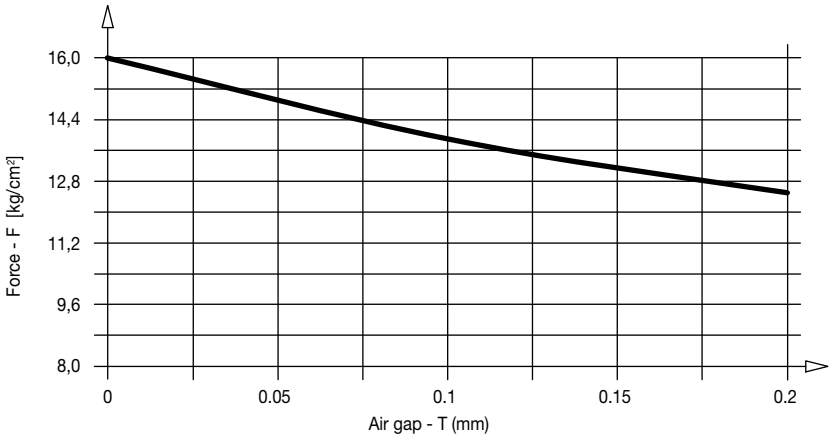


| | |
|---|---|
| Model **QP HC/HT 50**: | 23 cm$^2$ / pole |
| Model **QP ST/HC 80**: | 62.5 cm$^2$ / pole |
| Model **QP HT 80**: | 53 cm$^2$ / pole |
| Model **PT ST/HD**: | 40 cm$^2$ / pole |
| Model **QS 62/Easy Set**: | 37.5 cm$^2$ / pole |
| Model **QS 80**: | 62.5 cm$^2$ / pole |

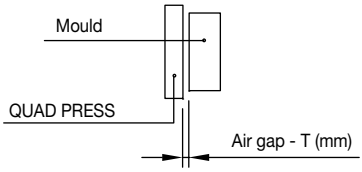


ENGLISH

## 2.3 Rated technical characteristics of the magnetic system

The magnetic platens can be used with a working temperature not higher than 120 °C (248°F) (*).
The only two components that limit the maximum operating temperature are the neodymium magnet and epoxy resin.

- The neodymium magnet can be used for temperatures up to 120°C (measured on the point of contact with the surface of the magnetic chuck during a continuous period of time). Sudden heat increases sometimes produce small “magnetic haloes” that disappear once the temperature returns within the guaranteed working parameters.
- The epoxy resin used is high thermal resisting. It is cast between the poles and the frame, remaining about 2-3 mm under the working magnet surface. This makes the thermal dissipation easier and moreover allows some microexpansions. The maximum acceptable temperature for a continuative operation is 130°C.

(*) OPTIONAL: model for high temperature with circuit 50 (150°C/302°F) or circuit 80 (180°C/356°F).

## 2.4 Supply general description

The system described in the manual generally comprises:

1) A couple of magnetic platens (fix platen / moving platen);
2) A couple of proximity probes;
3) An electronic controller (ST100P or ST400);
4) Electric cables;
5) Accessories (centering ring, additional plates, Euromap 70.X interface, etc., when required);
6) Thermal sensor (optional);
7) Touch screen (optional).

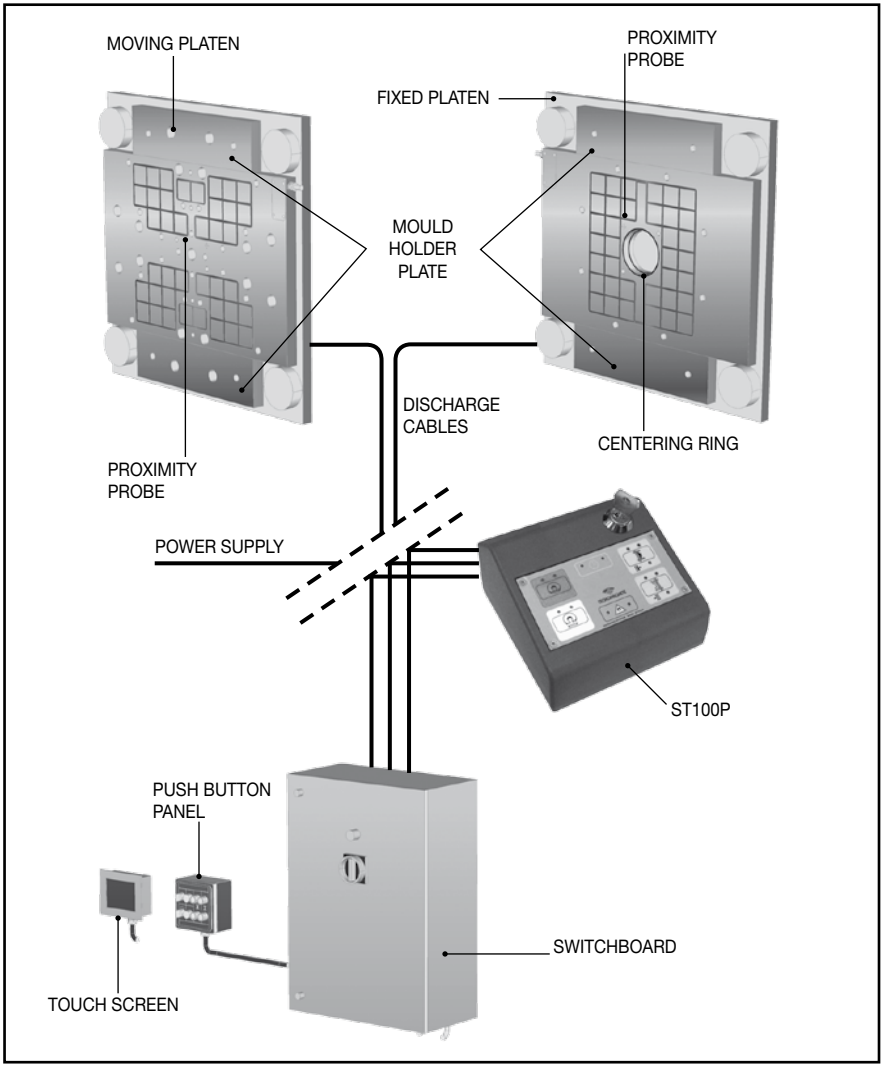
MOVING PLATEN
PROXIMITY PROBE
FIXED PLATEN
MOULD HOLDER PLATE
DISCHARGE CABLES
CENTERING RING
PROXIMITY PROBE
POWER SUPPLY
ST100P
PUSH BUTTON PANEL
SWITCHBOARD
TOUCH SCREEN

ENGLISH

## 2.5 Identification data

The magnetic chucks and controller are fitted with the manufacturer's nameplates, as shown in the following example.

**WARNING** ⚠

The plates must not be removed at all, even if the machine is resold. Always refer to the model described when contacting the manufacturer.

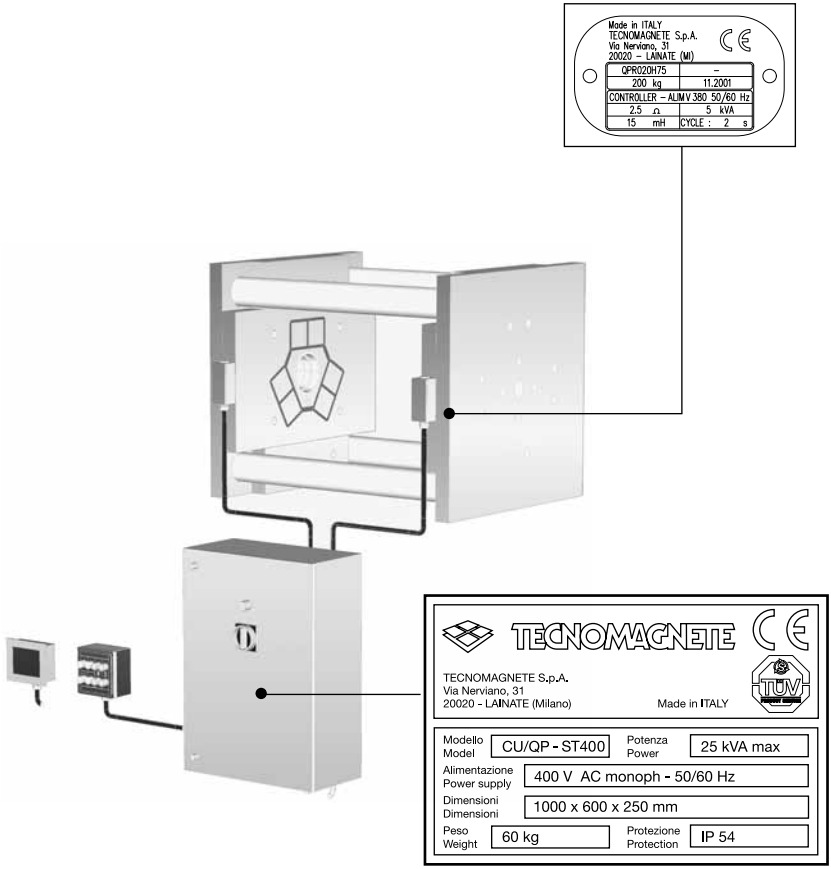

## 2.6 Component description

1 ➨ Pole
2 ➨ Frame
3 ➨ Box
4 ➨ Cable ties (Optional - Connectors)
5 ➨ Centering ring
6 ➨ Holes for brackets
7 ➨ Resin
8 ➨ Proximity probe
9 ➨ FCS



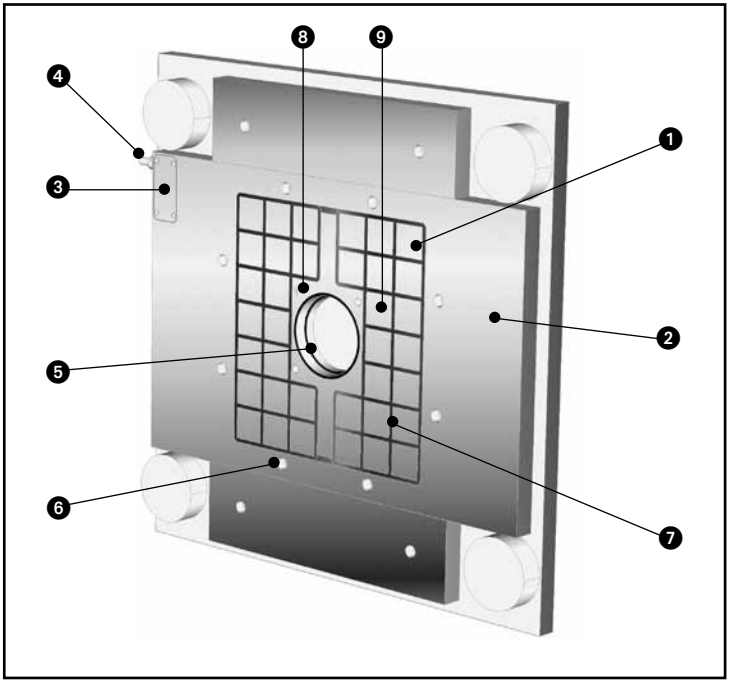

## 2.7 Controller features

### 2.7.1 Controller ST100P, ST400

| MODEL | VOLTAGE AT 50-60 Hz | DISCHARGE NUMBER | UCS (UNIT CONTROL SYSTEM) | FCS (FLUX CONTROL SYSTEM) | PROXIMITY | FCS IN PROCESS | IPC (INTERACTIVE POWER CONTROL) | TCS (TEMPERATURE CONTROLSYSTEM) | EUROMAP 70.X | CONNECTORS | DB9 INTERFACE | CYCLE TIME |
|---|---|---|---|---|---|---|---|---|---|---|---|---|
| ST100P | 200V | 4 | S | S | S | X | X | X | X | X | S | 5S |
| | 230V | | | | | | | | | | | |
| ST400 | 200V | 2 ÷ > 16 | S | S | S | O | O | O | O | O | X | 3S ÷ > 17S |
| | 230V | | | | | | | | | | | |
| | 400V | | | | | | | | | | | |
| | 480V | | | | | | | | | | | |
| O = OPTION - S = STANDARD - X = NOT AVAILABLE | | | | | | | | | | | | |

### 2.7.2 Characteristics of the magnetic chucks

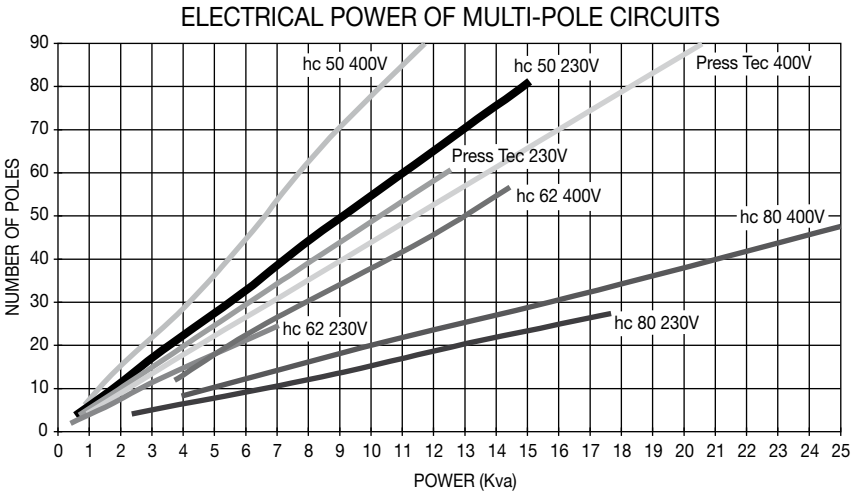

### 2.7.3 Press control operation

The mould controller has varying dimensions, depending on the size of the mould. The controller has a pair of fuses on the input side that protect the electric controller (ST100P 16A) or (ST400 63A) from short-circuits (smaller moulds should be protected with suitably rated fuses).

The electrical supply to the controller must be single-phase 200/230V (ST100P) or 200/230/400/480V (ST400) (phase+neutral) or two-phase (phase+phase). The maximum power required depends on the number of poles used for each discharge, but does not exceed 25 kVA per mould for voltages of 400V, 15 kVA per mould for voltages of 200/230V and 32 kVA per mould for voltages of 480V.

The controller has a pushbutton panel that displays the statuses of the system and that can be used to operate the magnetic chucks. If the system is interfaced with a PLC, the button or selector enabling/release times must match those of the pushbutton panel.

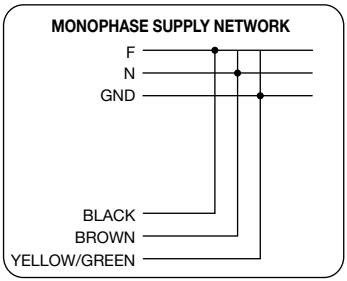


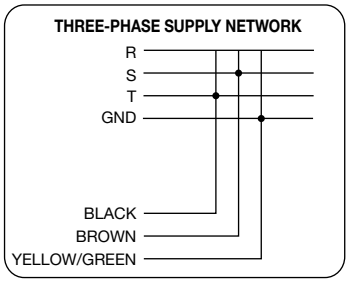


## 2.8 Electric cables

All cables must be routed directly from the electronic controller to the magnetic chuck, as shown in the wiring diagram, without intermediate connections and/or junction boxes.

**It is advisable to install upstream from the controller a suitable protection with magnetothermal switch (curve C), with a value $I_n$ matching the data on the magnetic chuck nameplate.**

The standard cables supplied include:

1. Power cable

   Regardless of the number of discharges, the electric control is always supplied by means of a power cable.
   The power cable is a PVC cable with appropriate section and length.
   The equipment must be protected with a differential magneto-thermal switch suitable for the rated current of the system.

2. Discharge cable

   Regardless of the number of discharges, chucks are generally supplied without discharge cables that therefore have to be connected during the installation phase.
   Discharge cables are in PVC, have an appropriate number of leads and section, both for the connection to the power supply and logics, and a total length suitable to allow both chucks to be connected.
   He discharge cables must be connected to the chuck and electric control in accordance with the instructions provided in the attached wiring diagrams.

3. Push-button cable

   The push-button cable, if present, is a PVC cable with an appropriate number of leads.
   The pushbutton cable must be connected to the electric cabinet in accordance with the instructions provided in the attached wiring diagrams.

As far as possible, all cables must be connected to the equipment in line with the following points:

a) The minimum bending radius must be 10 times the diameter
b) The cable tension should not exceed 15 N/mm$^2$
c) Installation must comply with the requirements of standards CEI EN 60204/1.

After installing the cables, check for mechanical wear and tear while the equipment is working.

## 2.9 Control pushbutton panels

The system is fitted with 3 types of operator interfaces:

1) ST100P

2) ST400P

3) ST400IPC

### 2.9.1 ST100P

With this pushbutton panel it is possible to perform only the demagnetization cycle and full magnetization cycle on a mould fitted with a controller for the proximity probes and flux. The alarm is enabled when the system is in an alarm condition (incorrect magnetization or demagnetization current, mould detached, etc.).
System ST100P is fitted with two proximity probes and FCS units, which are respectively used for the mobile and fixed chucks, and with an external enabling relay.

Buttons available on the pushbutton panel:

❶ Magnetization button
❷ Demagnetization button
❸ Button for the selection of the mobile chuck
❹ Button for the selection of the fixed chuck
❺ Cycle lamp
❻ Alarm lamp
❼ Complete magnetization lamp
❽ Complete demagnetization lamp
❾ Mobile chuck magnetization lamp
❿ Fixed chuck magnetization lamp
⓫ Mobile chuck probe lamp
⓬ Fixed chuck probe lamp
⓭ Key to enable/disable the magnetic system (MCM).

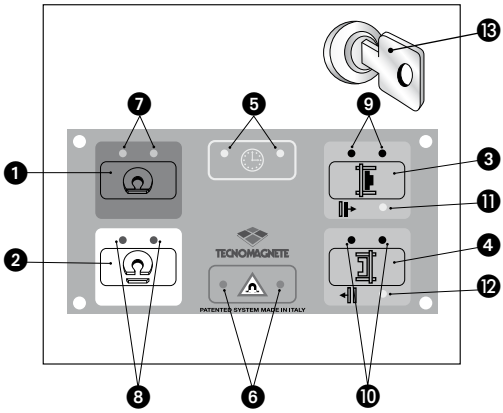


**Running the enabling/disabling cycles**

Before running the magnetization cycle:
- Check that the probe of the chuck you wish to magnetize is closed.
- Enable the enabling signal on the controller by using connector DB9 and activate the key contact (signal MCM).
- Simultaneously press the button of the desired chuck and magnetization button.

To run the demagnetization cycle:
- Enable the enabling signal on the controller by using connector DB9 and activate the key contact (signal MCM).
- Simultaneously press the button of the desired chuck and the demagnetization button.

**Complete magnetization/demagnetization lamps**
The complete magnetization lamp turns on when both chucks are magnetized. Conversely, the complete demagnetization lamp turns on when both chucks are demagnetized.
These lamps are off when the status of the fixed chuck differs from that of the mobile chuck.

**Flux alarm**
When a flux alarm occurs on one of the two chucks (fixed or mobile), the corresponding magnetization lamp starts to blink.
The alarm lamp continues to remain on, while the complete magnetization lamps switch off, if both chucks (fixed and mobile) are magnetized, until you disable the FCS as described below.
The FCS disabling causes the disabling of the alarm lamp, provided that there are no other active alarms. The magnetization lamp of the chucks on which the FCS alarm has occurred blinks and the complete magnetization lamp turns on when the fixed and mobile chucks are magnetized

**Disabling the FCS**
It is possible to disable the FCS for both the fixed and mobile chucks.
To do so you need to enable the MCM and hold the chuck selection button for at least one second. At the end of this operation, the lamp of the chuck that was in alarm starts to blink.

**RESTART condition**
This condition occurs if you simultaneously press for 1 second the fixed and mobile chuck selection buttons and if the MCM is disabled.
The RESTART condition is disabled when you release one or both buttons. The alarm lamps blink when the RESTART condition is active.

### 2.9.2 ST400P

The following figure shows the pushbutton panel of system ST400P:

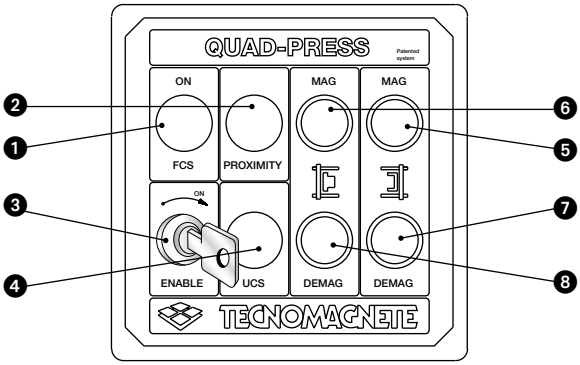


**Medium and large formats**

The pushbutton panel is connected to the controller by means of a cable of appropriate section and length, which runs from the keyboard to the controller inside a fairlead.
The pushbutton panel has the following dimensions: 152x152x88 mm; all components have a standard diameter of 22 mm.
The following controls are available only on RETROFITTING, EUROMAP 70.0 and EUROMAP 70.1 installations.

**1. FCS:**
**FCS and signal lamp enabling and disabling**
This selector allows disabling the FCS control.
If the lamp is constantly on, the selector is disabled, whereas if the lamp flashes, the last cycle has not reached the set limit (see paragraph 2.10.4).

**2. PROXIMITY:**
**Proximity sensor**
This lamp can be used to check the correct positioning of the probes. If it is turned on, both moulds are present, if it flashes one of the two moulds has not been correctly positioned and if it is turned off it means that both moulds are not in the correct working position.

**3. ENABLE:**
**Control enabling**
This key operated switch allows enabling the control to perform the desidered cycles.

**4. UCS:**
**Alarm**
This lamp highlights an anomaly; for example:
- incorrect current passage during the cycle phase;
- current passage not scheduled;
- detachment of the mould (see paragraph 2.10.1);
- Excessive temperature of magnetic chucks.

**5. Fixed platen MAG:**
**MAG push button for the fixed platen and signal lamp**
This push button, enabled by the key operated switch described in point 3, allows magnetizing the fixed platen.
If the lamp is on, the platen is completely magnetized.

**6. Moving platen MAG:**
**MAG push button for the moving platen and signal lamp**
This push button, enabled by the key operated switch described in point 3, allows magnetizing the moving platen.
If the lamp is on, the platen is completely magnetized.

**7. Fixed platen DEMAG:**
**DEMAG push button for the fixed platen and signal lamp**
This push button, enabled by the key operated switch described in point 3, allows demagnetizing the fixed platen.
If the lamp is on, the platen is completely demagnetized.

**8. Moving platen DEMAG:**
**DEMAG push button for the moving platen and signal lamp**
This push button, enabled by the key operated switch described in point 3, allows demagnetizing the moving platen.
If the lamp is on, the platen is completely demagnetized.

**Machine interface**
The operator's interface is available on all RETROFITTING and EUROMAP 70.0 installations.
For interface EUROMAP 70.1, you need to use a pushbutton panel to perform the operations described in points 1, 2, 3 and 4.
For information on the signal specifications, see the relevant reference standards.

### 2.9.3 ST400IPC

#### 2.9.3.1 Managing the magnetic chucks

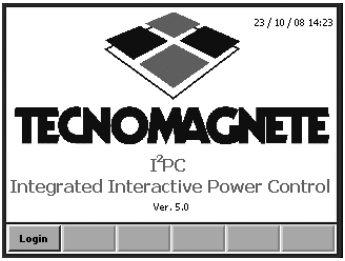


First IPC page

This page displays the following data:
- Software version
- **Login** button
- Current date and time

Press **Login** to display the following page:

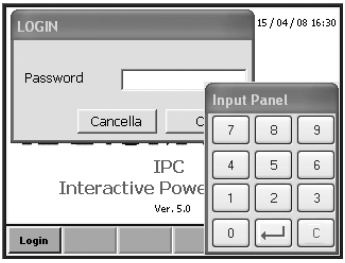


Enter Password page

Enter password 123456 to display the following page. If the password is incorrect, the system issues an error message.

IPC Start-up page

Press **MANAGE MAGNETIC CHUCKS** to display the page where it is possible to select the operating cycle.

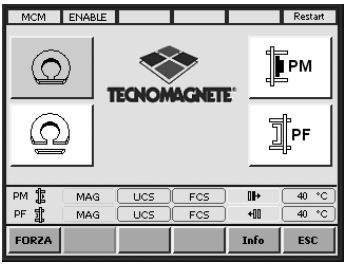


Operating Cycle Selection page

This page displays four buttons, two for the selection of the chuck and two for running controls. The control buttons enable only after the magnetic chuck has been selected.
In this operating mode, it is also possible to perform operations simultaneously.
The lower section displays the current statuses of the magnetic chucks, while the upper section displays the statuses of the control inputs.
The section immediately below displays the following buttons:

- **FORCE** c that can be used to display the magnetic performances of chucks.
- **ESC** p that can be used to return to the initial page.
- **Info** that can be used to display the mould assembly and disassembly procedure recommended by TECNOMAGNETE. The two pages are the following. Press **ESC** to return to the page where you can select the operating cycle or press the arrow key to toggle between the two procedures.

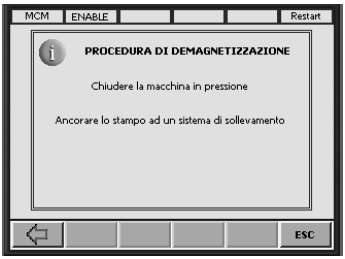


Information pages containing the mould assembly and disassembly procedure.

The operating cycle selection page also displays the statuses of the chucks (MAG if they are magnetized, DEMAG if they are demagnetized), the statues of the UCS (Unit Control System) and FCS (Flux Control System) alarms, the status of the proximity probes and the temperature value of each magnetic chuck. If the temperature of the magnetic chuck exceeds the warning threshold, which is set to 110 °C, the warning signal turns to yellow and subsequently to red if the temperature exceeds the alarm threshold, which is set to 120 °C.

To magnetize or demagnetize the magnetic chucks, it is necessary to turn selector MCM ENABLE, on the outside of the touchscreen, to ON in order to start the controller which manages the magnetization and demagnetization cycles*. The status of the MCM signal is displayed in the upper section of the touch screen.

* **Attention!** This selection must be moved to position OFF at the end of the mould change procedure. If the selector is still in position ON when the touch screen displays the initial page, the system issues an alarm message.

After selecting the chuck (or chucks) and the operating cycles, you will need to interact with the IPC system in order to confirm that the selected operations can be safely performed.

The system displays in particular a series of messages in black text that refer to checks that need to be performed. The messages in red refer to conditions that are required to run the selected cycle and that have not been found by the controller. This may occur, for example, during the execution of a magnetization cycle if the system does not detect the presence of a mould.

Page for the execution of the operating cycle when the mould is not detected.

ENGLISH

After reading the messages and verifying that the conditions are not hazardous, it is possible to start the cycle as described below (the procedure applies to all operating modes).

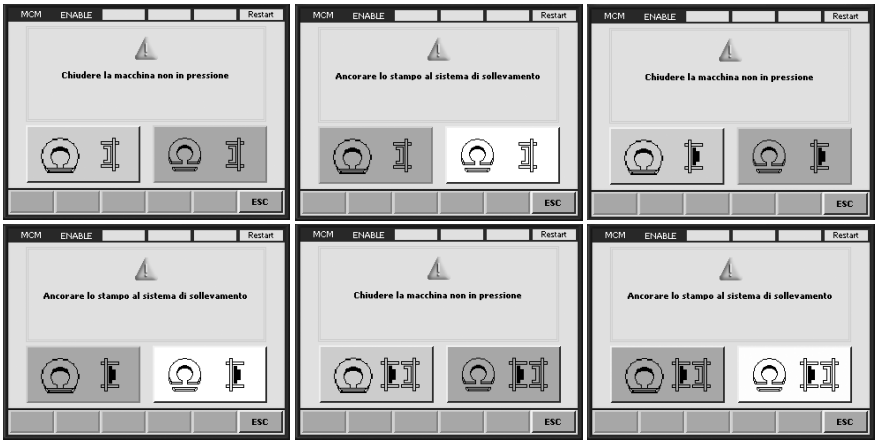


Pages for the execution of the selected operating cycle.

To run the cycle, press the active execution button and the button that corresponds to the selected cycle. If the cycle does not correspond to the desired one, press ESC to return to the previous page.
The system signals that the cycle is in progress once it has been enabled. 1.5 seconds after the end of the cycle, the system automatically returns to the previous page. To return to this page more quickly, it is also possible to press **ESC.**

Pages for the execution of the selected operating cycle.

**Attention!** After a magnetization cycle, it is not possible to run a magnetization cycle.

### 2.9.3.2 Restart procedure

IPC Start-up page

After entering password 123456, it is also possible to press button **MAGNETIC CHUCKS MANAGEMENT** described above to enable the **RESTART PROCEDURE** and start the mould.
When the controller detects an alarm or fault that may endanger the operator or damage the machine or mould, it opens the enabling contact and disables the machine operation (this contact is active only if the controller is connected to IMM).
When the contact is open, the machine operation can be resumed only after removing the cause of the problem.
If it is necessary to move the machine chuck in order to remove the alarm cause, it may be appropriate to run the restart procedure.
Press button **RESTART PROCEDURE** to display the following page.

Restart page

Press button **Restart** to allow the controller to issue an acknowledgement signal to the machine in all situations and thus enable the operator to operate the machine even in alarm conditions.
This procedure remains active for a maximum of 3 minutes.
The enabling of the procedure is signalled by the appearance of a message on the display and by a timer that displays the time elapsed from the enabling.

A further selection of **Restart** resumes the operation of all the control functions and removes message **Restart** from the display.
As with all safety devices, the Restart feature is disabled during the magnetization/ demagnetization cycle or after 3 minutes if the **Restart** feature has not been enabled by the operator.

### 2.9.3.3 FCS disabling procedure

The controller is fitted with a safety device called FCS (Flux Control System). This device controls the value of the magnetic flux on at least one pole of the magnetic chuck. A low magnetic flux value indicates that the force of the chuck is also low. Therefore, if the saturation value does not reach the preset value, the machine issues alarm FCS and stops all operations.
A low magnetic flux value may occur if the air gap is too high, if the mould's material has a low magnetic permeability or if there is a cavity near the sample pole (in this case the module is anchored correctly and the alarm is issued because the mould is not in contact with the sample pole). In the latter case, the operator may choose to intentionally bypass the FCS alarm to allow the machine to continue working.
If the FCS is disabled, the minimum force control is also disabled.
If an FCS alarm occurs, the value of the force measured by IPC may be inaccurate.
If the FCS alarm is present in the operating mode selection page, button **FCS** is enabled. This button can be used to disable the magnetic flux control.

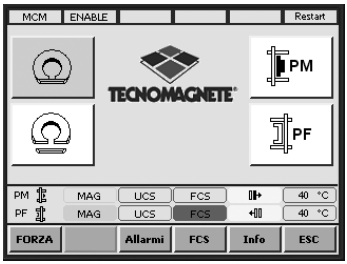


Page for the selection of the operating mode with active FCS alarm

Press button **FCS** to display the information page and validate the procedure in progress.

FCS Disabling page

In this page the operator will have to interact with the system and perform the checks displayed.
The operator will then have to confirm that he wishes to:
• Disable the FCS controller
• Disable the control of the minimum mould clamping force
Press **ESC** to return to the previous page.
Run this procedure to enable the machine in all conditions where the flux is low.
Disabling is confirmed by the flashing of the FCS status. If the FCS lamp is flashing, the FCS control and minimum clamping force control are disabled.

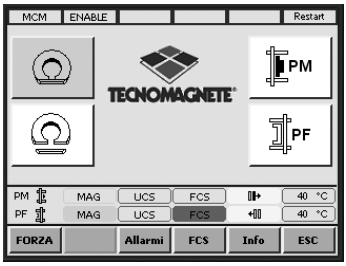


Page for the selection of the operating mode with disabled FCS alarm

Disabled controls can be re-enabled by running a magnetization or demagnetization cycle.
Press the alarms button to display all the active alarms of the mould.

### 2.9.3.4 Assessing the clamping force

From the page where it is possible to select the operating modes and that displays the statuses, you can access the information page that shows the force produced by the magnetic chucks by pressing FORCE.

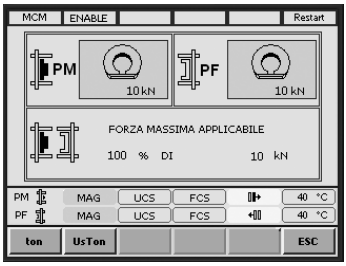


CLAMPING FORCE page

The first field in the upper left displays the magnetic force produced by the mobile chuck, the second field in the upper right displays the force produced by the fixed chuck, while the third field in the lower section displays the maximum magnetic force used by the system to clamp the mould, which is lower than the two previous values.

This pane displays the mould holding force expressed as percentage of the force that would be available if all the poles of a chuck were covered. If this value is above the MINIMUM PERCENTAGE FORCE value set by the customer, it is possible to use the procedure described below to start the operation of the machine.
It is important to note that this value can also be used to set the forces of the machine and ensure that the maximum value of 80% (recommended value) does not exceed the previously set value.
If the FCS alarm is active, the clamping force displayed by the IPC may be incorrect.
Press button Ton (or UsTon) to convert the force values described above from kN to **Ton** (or **USTon**).
Press button **ESC** to return to the page where you can select the operating mode.

The minimum clamping value of the chucks is also displayed in the initial page if the system is fully magnetized.

### 2.9.3.5 Configuring the system

Press button Login on the first page to display the password prompt. Enter password 654321 to display the following page.

IPC start-up page

Press **Setup** to display the page with the system settings or **LogOut** to return to the first page of the IPC system with the password prompt.

Press **Setup** to display the following page:

IPC Setup page - Set Language

In this page you can:
- Select the desired language
- Change the operator's password (123456) and the SuperUser's password (654321)
- Set the minimum acceptable force
- Select the type of interface you wish to use

Press the arrow key to select the setting you wish to change.
To change the touch screen language, place the arrow key next to option “LANGUAGE SELECTION”. Then, press the button with the flag to scroll the available languages and select the desired one.

Press once more the arrow key to go to the password entry procedure:
- Operator: operators can only perform the enabling cycles, the restart procedure and disable the FCS system.
- SuperUser: users with SuperUser rights can perform all the operations described above and also access the IPC setup pages.

IPC Setup up page - Set Password

ENGLISH

When you select this page, the system automatically displays button **Setup** that can be used to change the password as explained below.

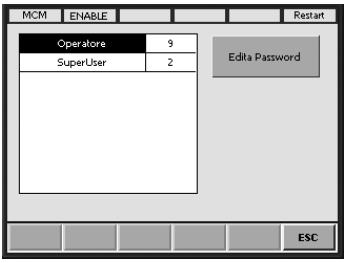


Change Password page

In this page you can change the password and customize it. Select the user for whom you wish to change the password, then press button **Edit Password.** The system now displays a page where you can enter the old password, new password and confirmation password. The confirmation password must match the new password, otherwise the system issues an error message. The length of the password should not exceed 6 characters.

Press **ESC** to return to the previous page.

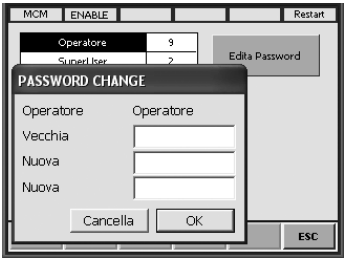


Change Password page - Enter New Password

Press once more the arrow key to select option “MINIMUM PERCENTAGE”, then set the minimum force value that the IPC system should accept.

IPC Setup page - Change Minimum Force Percentage



ENGLISH

The MINIMUM FORCE PERCENTAGE (minimum acceptable force) is a safety limit, in that it prevents the machine from operating when the magnetic clamping force of the IPC system is below the preset value.
The value must be set by the customer as percentage value of the total clamping force of the magnetic system.

Highlight the numerical value and insert the new percentage value.

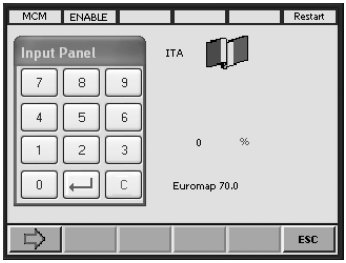


IPC Setup page - Change Minimum Percentage Force

IPC Setup page - Set Language

To be able to change the language of the interface, you need to highlight option “INTERFACE” and then press button Euromap to select the desired language.

## 2.10 Safety devices

The magnetic system is fitted with safety devices that control that the magnetic chuck has been fully enabled (see UCS and FCS devices). During the magnetization phase, it is also possible to use an auxiliary enabling cycle (called SUPER MAG) to reduce the air gaps between the magnetic chuck and mould.

### 2.10.1 System control (UCS)

This device has several controls:

1) in the magnetization/demagnetization cycle phase, it checks the current passage from the main discharge cables to the magnetic platen;
2) during the machine operating cycle (except for the magnetization/demagnetization cycles) it checks that there are no anomalous currents going through the system;
3) Indicates a mould detachment attempt. The lamps of the chuck where the problem occurs turn off;
4) Indicates that the temperature of the magnetic chuck is too high.

### 2.10.2 Machine interface

The system closes the relay that enables the mould if:

- There are no active alarms on the machine, the fixed chuck is magnetized, the mobile chuck is magnetized and the probes of the fixed and mobile chucks are closed.
- There are no active alarms on the system, the fixed chuck is demagnetized, the mobile chuck is demagnetized and the probes of the fixed and mobile chucks are open.
- There are no active alarms on the system and the MCM signal are present.
- There are active alarms on the system and the RESTART signal is present.

In all other conditions the relay that enables the mould is open.

On system ST100P, the ENABLE output signal is between pins 8 (COM) and 9 (NO) of the 9 pin connector on the rear of the controller.
On system ST400, the enabling signal is on contacts 70-71-70A-71A or on the socket for Euromap 70.0 and 70.1 installations.

When the cycle is enabled, system ST100P short-circuits, using a voltage-free contact, pins 6 and 7 of the 9-pin connector on the rear of the controller. On system ST400 this is done using contacts 83-84-83A-84A or the socket for Euromap 70.0 and 70.1 installations.
The system accepts as input one or two signals for the enabling of the magnetization and demagnetization cycles. If these signals are not present, it is not possible to run any cycle.

System ST110P is provided with a small key that must be inserted into the 9-pin connector and that is used to enable the magnetization and demagnetization cycles.
This signal is connected in series with the MCM enabling key.

### 2.10.3 Proximity sensors (PROXIMITY)

The magnetic system is fitted with two proximity sensors (SQ1 and SQ2) positioned in the central section of the chucks.
The proximity sensors detect the mould presence and their intervention can occur in the following cases:
- incorrect mould positioning during the inserting and blocking phase;
- mould disengagement attempt during the machine operating cycle.

The proximity sensor intervention distance is calibrated at 0,2 mm. The probe intervention is then subject to this operating field; when this field is exceeded, the sensors send the signal used to block the machine.

### 2.10.4 Flux control system (FCS)

This device checks that the magnetic flux circulating in standard poles, which can be recognized by a red resin point, reaches the set limit. The device is made up of a special solenoid wrapped around the poles, which acts as a magnetic flux sensor.

### 2.10.5 Measurement of the magnetic force

(see paragraph 2.9.3)

### 2.10.6 Standard ALARM connections (OUTPUT ENABLE)

The internal standard connections of the controller comply with the indications shown in the attached wiring diagram.
The ENABLE contact opens when the system is in alarm and stops the machine if it is connected in series with the machine enabling movements. It is advisable to install a relay between the ENABLE signal and the machine movements enabling.

## 2.11 Rated technical features of the controller operation

The system operates with the following conditions:

| | |
|---|---|
| Voltage: | nominale ±10% |
| Frequency: | nominale ±1% |
| Temperature: | -5°C÷+40°C (23°F÷104°F) |
| Humidity: | <50% at 40°C (104°F) |
| Maximum altitude: | 2000 m SLM |

The system has a noise emission <70 dB.

# 3 INSTALLATION

## 3.1 Inspection of purchased product

On receiving the equipment, check that the packings are not broken or damaged and that the supply corresponds to the order specifications.
If a through check shows that all is well, unpack the equipment (except when differently indicated by TECNOMAGNETE) and make sure the machine has not been damaged during transport.
Check for possible damages on the structure and for crushings or breakings of the electric connections.

ENGLISH

**WARNING**
In case of damages or anomalies apply to the manufacturer within ten days from the receipt of the supply.

## 3.2 Electric connection

**WARNING**
**All electric installation operations (machine connection to the mains) must be carried out by skilled personnel only.**
The electric system must be installed in accordance with the laws in force.
**Consult the wiring diagrams ENCLOSED.**

## 3.3 Installation of the magnetic system

The following tables provide the axial pre-charge value **P** and the corresponding torque values **M** that have to be applied to the screws used to assemble. The values in the table apply to screws with hex head type UNI 5737-65 and to socket head screws type UNI 5931-67. The friction coefficient was considered equivalent to 0.14, which is the value that generally applies to blackened and lubricated surfaces. The torque must be applied gradually using dynamometric wrenches.

| Threading | Resistance class = 8.8 | |
|---|---|---|
| | P (N) | M (Nm) |
| M 6 x 1 | 9000 | 10,4 |
| M 8 x 1,25 | 16400 | 24,6 |
| M 10 x 1,5 | 26000 | 50,1 |
| M 12 x 1,75 | 37800 | 84,8 |
| M 14 x 2 | 51500 | 135,0 |
| M 16 x 2 | 70300 | 205,0 |
| M 18 x 2,5 | 86000 | 283,0 |
| M 20 x 2,5 | 110000 | 400,0 |
| M 22 x 2,5 | 136000 | 532,0 |
| M 24 x 3 | 158000 | 691,0 |
| M 27 x 3 | 206000 | 1010,0 |
| M 30 x 3,5 | 251000 | 1370,0 |

1) Place the fixed magnetic chuck onto the table on the fixed side of the machine and check that it is correctly positioned. To perform this operation, use the pre-assembled centring ring (if supplied with the machine) (in combined versions – see large systems – it is necessary to initially install the central block and then the other components that form the magnetic chuck).
2) Fix the magnetic chuck on the table on the fixed side of the machine using the holes for the locking screws.
3) Drill the threaded holes on the machine bed next to the slots provided for this purpose on the magnetic chuck, which do not match the existing holes. Most of these holes are concentrated in the central part of the systems, where the press beds are not generally fitted with fixing holes (*).
4) Complete the fixing of the magnetic system using the additional holes (see note **).
5) Follow the procedure described to anchor the mobile chuck onto the table on the mobile side of the machine.
6) Install the electronic controller (which should be ideally installed next to the operator's panel for machines ST100P or on the injection side on the rear of the machine for machines ST400) and, if possible, fix it in place using the holes provided for this purpose.
7) Connect the electric cables of the magnetic system chucks to the controller verifying that they are not routed above moving parts and that the route chosen is suitable for the technical characteristics of the cables.
8) Install the pushbutton panel (which should be ideally installed next to the control pushbutton panel of the machine).
9) Connect the cables of the remote pushbutton panel to the electronic controller (following the instructions provided in the wiring diagrams).
10) Connect the interface cable to the electronic controller of the magnetic system and the machine controller (following the instructions provided in the wiring diagrams).
11) Connect the power cables of the electronic controller of the magnetic system (please remember that the load has a single phase (phase-neutral) or two phases (phase-phase) and that the system must be powered at the voltage indicated in the wiring diagrams).

"*" **Attention!** It is essential to fix the magnetic chucks to the central section next to the fittings provided for this purpose. Failure to perform this procedure may cause the detachment of the mould (*).

"**" **Warning:** the magnetic platens must be fastened in the central area by means of the screws (M 12 - 1/2")! If the platens are not fastened, the mould may disjoin!

ENGLISH

# 4 ORDINARY USE OF THE SYSTEM

## 4.1 Mould clamping procedure

1) Set the mould in manual mode (MCM enabled).
2) Carefully clean the contact surfaces between the magnetic chuck and the mould.
3) Insert the mould and move it close to the fixed chuck, verifying that it is correctly centred on the magnetic chuck.
4) Close the mould. ATTENTION! The machine is not pressurized in this phase.
5) Check the PROXIMITY lamp.
6) Run the magnetization cycle on the fixed chuck.
7) Release the pressed buttons.
8) Verify that the MAG lamp on the fixed chuck turns on.
9) Verify that the UCS alarm lamp turns off.
10) Verify that the FCS alarm lamp turns off.
11) Run the magnetization cycle on the mobile chuck.
12) Release the pressed buttons.
13) Verify that the MAG lamp on the mobile chuck turns on.
14) Verify that the UCS alarm lamp turns off.
15) Verify that the FCS alarm lamp turns off.
16) Remove the key to prevent the accidental execution of cycles.
17) Detach the mould from the lifting system and remove the handling bars.
18) Perform the checks described in chapter 4.2 and, if necessary, adjust the mould force (for example the opening force).
19) Set the machine in automatic mode.
20) Remove the key to prevent the accidental execution of cycles.

## 4.2 Technical operating description of the applied forces

The magnetic clamping force of TECNOMAGNETE's magnetic systems has been tested and certified. This force is produced in the following conditions:

- The contact surface with the magnetic chuck is perfectly straight;
- The thickness of the plate in contact with the magnetic surface is sufficient to contain the depth of the magnetic field (see note*);
- The material in contact with the magnetic surface is mild steel;
- The whole magnetic surface is covered.

The above-described conditions (see chapter 2.2) represent the technical requirements that are needed to exploit the magnetic system at full power.

It is important to note that system ST400IPC is able to automatically assess the magnetic force produced by the chucks and the maximum force applied to the magnetic chucks of the mould.

**Example referred to a system with a circuit 80**

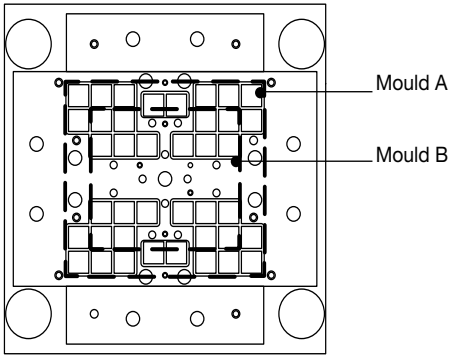


**MOULD A** (FULL AND PLANAR CONTACT SURFACE):

- No. OF POLES COVERED = 36
- FORCE OF EACH POLE = 1000 daN (derived from the force/air gap curve see chapter 2.2 and from the conditions described above)
- CLAMPING FORCE Fa = 1000 x 36 = 36000 daN

**MOULD B** (FULL AND PLANAR CONTACT SURFACE):

- No. OF POLES COVERED = ~ 20
- FORCE OF EACH POLE = 1000 daN (derived from the force/air gap curve see chapter 2.2 and from the conditions described above)
- CLAMPING FORCE Fa = 1000 x 20 = 20000 daN

**TECNOMAGNETE recommends to reduce the theoretically calculated force (Fa) by approximately 20% and, when possible, to consequently adjust the machine opening force:**

**Ft = Fa x 0,8**

*** Note: to use the maximum clamping force for moulds with smaller dimensions as compared to the magnetic zone, install a sub-plate that is able to cover all the poles and with a minimum thickness of 25 mm for machines with circuit 80 and Ø 70, of 20 mm for machines with circuit 62 and of 15 mm for machines with circuit 50.**

## 4.3 Mould removal procedure

1) Set the mould in manual mode (MCM enabled).
2) Approach the mobile chuck and close the mould.
3) Fix the mould onto the lifting system.
4) Run the demagnetization cycle on the mobile chuck.
5) Release the pressed buttons.
6) Verify that the DEMAG lamp on the mobile chuck turns on.
7) Verify that the UCS alarm lamp turns off.
8) Remove the mobile chuck from the mould and open the latter.
9) Check the PROXIMITY lamp.
10) Run the demagnetization cycle on the fixed chuck.
11) Release the pressed buttons.
12) Verify that the DEMAG lamp on the fixed chuck turns on.
13) Verify that the UCS alarm lamp turns off.
14) Remove the mould from the fixed chuck.
15) Remove the key to prevent the accidental execution of cycles.

## 4.4 Safety rules

➟ **Do not fix the moulds onto the magnetic system if:**

☞ there is no centering ring, the half mould weight is 1/5 greater than the magnetic clamping force available.

☞ traces of oil or grease have not been completely removed from the surface of the mould in contact with the magnetic chuck. It is generally advisable to protect the moulds and magnetic system with “FAT FREE” spray.

☞ the mould dimensions do not cover a magnetic surface sufficient to ensure an accurate clamping (see chapter 4.2).

☞ the mould presents bucklings, concavity or convexity.

☞ the mould presents empty areas near the proximity probes.

☞ the mould is not ferromagnetic (see chapter 2.2).

☞ the mould centering position is misaligned.

➟ **Do not start the magnetic system if:**

☞ the system temperature is higher than the one indicated in this manual.

☞ the mould extraction pressure is above the clamping force that can be produced by the magnetic system (see chapter 4.2).

☞ the RESTART lamp is on.

☞ the MAG lamps are off.

☞ the UCS alarm lamp is on.

➟ **If the machine stops, run the restart procedure following the instructions provided in chapter 4.5.**

➟ **Do not carry out the MAG cycle if the mould is not in contact.**

➟ **If a power outage occurs during the magnetization/demagnetization cycle, always perform a demagnetization cycle first.**

➟ **Do not touch any selectors or press any buttons while the magnetization or demagnetization cycles are in progress.**

➟ **Do not bumps against the magnetic platens.**

➟ **Do not use solvents containing aggressive components that could etch or corrode galvanised surfaces or epoxy resins.**

## 4.5 Procedure to follow in case of emergency machine fault

➟ **If the machine stops due to a mould detachment attempt, it is MANDATORY to perform the following procedures before restarting the production cycle:**

☞ Set the mould in manual mode.

☞ Move the trolley backwards and retract the extractors.

➡ **FOLLOW THE PROCEDURES DETAILED IN THE MOULD OPERATING MANUAL.**

ENGLISH

**Note: IN THIS PHASE THE CHUCKS ARE NOT YET MAGNETIZED**

☞ Perform the restart operation.

☞ Approach the mobile chuck and close the mould.

☞ Fix the mould onto the lifting system.

☞ Run the demagnetization cycle first on the mobile chuck, then on the fixed one.

☞ Run the magnetization cycle first on the mobile chuck, then on the fixed one.

☞ Verify that the MAG lamps of the fixed and mobile chucks turn on.

☞ Verify that the UCS alarm lamp turns off.

☞ Verify that the FCS warning lamp turns off.

☞ Place the machine in automatic mode.

☞ Remove the key to prevent the accidental execution of cycles.

# 5 MAINTENANCE

## 5.1 Foreword

A suitable maintenance lenghtens the equipment life expectancy and keeps it in excellent and efficient working conditions. It also ensures lasting safety standards throughout the years.

**WARNING**
It is highly recommended that **ONLY SKILLED PERSONNEL SHOULD CARRY OUT MAINTENANCE OPERATIONS.**

## 5.2 Safety rules during maintenance

The main precautions to be adopted during maintenance are:

- ☞ **Never touch** uncovered connections and components without disconnecting the equipment from the mains.
- ☞ **Disconnect the power supply** before removing any part or replacing any electric component.
- ☞ **Do not wear** rings, watches, necklaces, bracelets etc. during maintenance operations.
- ☞ **Use**, if possible, an insulating rubber carpet under your feet when carrying out maintenance operations. Do not operate on wet floors or in very humid environments.
- ☞ **Always use** protective gloves, safety shoes and other personal protection equipment which may be needed, as well as clothes covering body parts as much as possible.

## 5.3 Periodical maintenance

**MONTHLY**

- ☞ Visual inspection of the magnetic platen state.
- ☞ Check of the magnetic platen screw tightening.
- ☞ Removal of possible unevennesses and wrinkles.
- ☞ Check of the magnetic platen surfaces.
- ☞ Check of the signal lamps.
- ☞ Check of the push buttons.
- ☞ Visual inspection of the terminal board of both the magnetic platens and of the controller.

**EVERY SIX MONTH**

1 - Disconnect the magnetic platen discharge cables from the proper junction boxes.
2 - Measure the resistance and isolation values at 500 V.
3 - Connect the magnetic platen discharge cables to the proper junction boxes again.
4 - Pass a steel piece on the platen surface, in order to detect possible traces of important areas with magnetic halos.
5 - Pass a steel object over the proximity switches to verify that they are in good working order.

# 6 TROUBLESHOOTING AND CORRECTIVE ACTIONS

This section describes how to solve the most common problems which can occur when using the unit.

| Problem | Corrective action |
|---|---|
| The system does not run the magnetization cycle on the fixed/mobile chuck. | Verify that the enabling key selector has been rotated. |
| | Verify that the ENABLE CONTROLLER contact is closed. |
| | Verify that the proximity probe of the fixed/mobile chuck is closed. |
| | Verify that the MAG button is held down for at least 500 ms. |
| | Verify that the ALARM lamp is not turned on. |
| The system does not perform the demagnetization cycle on the fixed/mobile chuck. | Verify that the enabling key selector has been rotated. |
| | Verify that the ENABLE CONTROLLER contact is closed. |
| | Verify that the DEMAG button is held down for at least 500 ms. |
| After running a (magnetization or demagnetization) cycle, the system continues to issue a UCS and FCS alarm. | Check the supply voltage. |
| | Inspect the discharge cables. |
| | Verify that the surface of the mould is regular and that there are no holes on the bottom. |
| The system issues an UCS alarm after performing a magnetization cycle. | Verify that the mould has not detached. Place the mould in the correct position and repeat the magnetization procedure after the detachment of the mould. |
| | Verify that there are no unexpected current flows. |
| The system continues to issue an FCS alarm. | Check the supply voltage. |
| | Inspect the connection of the discharge cables. |
| | Verify that the mould is close to the chuck. |
| | Verify that the surface of the mould is regular and that there are not holes on the bottom, next to the sample poles. |
| Lamp PROXIMITY does not operate correctly at the end of the mould assembly operations | Remove the mould and inspect the proximity probes. |
| | Verify that the mould has not moved from its original location. |

# 7 DISMANTLING

## 7.1 Storage

If the equipment must be stored for a certain amount of time, observe the following instructions:

➜ Disconnect the controller from the magnetic platen.

➜ Clean the platen surface

➜ Cover the platen with a waterproof tarpaulin

➜ Keep the equipment in a dry environment.
Keep the temperature between 0 °C (32 °F) ÷ +55 °C (131°F).

## 7.2 Putting out of service

If the equipment must be put out of service, observe the fundamental rules to safeguard the environment.

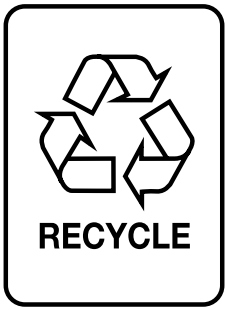

# 8 WARRANTY

All TECNOMAGNETE's products have a 24 month warranty from the date of invoice, except in case of different written agreements. The warranty covers all manufacturing and material defects. Replacements and repair operations are covered only if carried out by our company and at our servicing shops.
The material to be repaired will have to be sent CARRIAGE FREE.
Once the components have been repaired they will be sent to the customer CARRIAGE FORWARD.
The warranty covers neither technicians' intervention on site nor the machine disassembly from the installation. If for practical reasons, one of our technicians is sent on site, the customer will be charged the cost plus the travelling expenses.
Our warranty does not cover direct or indirect damage, to people or property, caused by our appliances and it does not cover repair operations carried out by the owner or by a third party.

Our warranty does not include:
- ☞ breakdown caused by wrong use or assembly.
- ☞ breakdown caused by the use of spare parts other than the recommended ones.
- ☞ breakdown caused by encrustations.

WARRANTY FORFEITURE:

- ☞ in case of arrearage or other breaches of contract;
- ☞ reparations under warranty shall not affect the duration of the warranty period;
- ☞ if unauthorized reparations or alterations are made to our machines;
- ☞ if the serial number has been tampered with or deleted;
- ☞ in case the damage was caused by misuse, bad treatment, bumps, falls or other causes not due to normal working conditions;
- ☞ in case the equipment was disassembled, tampered with or repaired by TECNOMAGNETE unauthorized staff.

**For any controversy the place of jurisdiction is Milan (Italy)**

For any problem or information apply to the customer care service at the following address:

**CUSTOMER CARE SERVICE**

TECNOMAGNETE®

**TECNOMAGNETE S.p.A.**
**Via Nerviano, 31 - 20020 Lainate (Mi) - ITALY**
Tel. +39-02.937.59.208 - Fax. +39-02.937.59.212
service@tecnomagnete.it

# 9 TECNOMAGNETE SUPPORT CENTRES

**MAIN OFFICE - ITALY**
**TECNOMAGNETE SpA**
Via Nerviano, 31
20020 Lainate - Italy
Tel. +39 02937591
Fax +39 0293759212
info@tecnomagnete.it

**FRANCE - BELGIUM - LUXEMBOURG**
**TECNOMAGNETE SARL**
52 Av. S. Exupéry
01200 Bellegarde Sur Valserine
Tel. +33.450.560.600 (FRANCE)
Fax +33.450.560.610
contact@tecnomagnete.com

**GERMANY - AUSTRIA - HUNGARY**
**SWITZERLAND - SLOVAKIA -**
**THE NETHERLANDS**
**TECNOMAGNETE GmbH**
4 Ohmstraße
63225 Langen (GERMANY)
Tel. +49 6103 750730
Fax +49 6103 7507311
kontakt@tecnomagnete.com

**PORTUGAL**
**SOREP**
Rua Nova Da Comeira, 4
2431-903 MARINHA GRANDE (PORTUGAL)
Tel. +351 244572801
Fax +351 244572801
geral@sorep.co.pt

**SPAIN**
**DTC TECNOLOGIA**
Poligono Osinalde - Zelai Haundi,1
20170 USURBIL (SPAIN)
Tel. +34 943 376050
Fax +34 943 370509
dtc@dtctecnologia.com

**U.S.A. - CANADA - MEXICO**
**TECNOMAGNETE Inc.**
6655 Allar Drive, Sterling Hts, MI 48312
Tel.: +1 586 276 6001
Fax: +1 586 276 6003
infousa@tecnomagnete.com

**BRAZIL**
**COMASE Com. e Prest. de Serv. Ltda**
Av. J. Alvez Correa 3608,
Jd. Planalto, Valinhos - SP- CEP 13270-400
Fone/ Fax: +55 (19) 3849-5384

**JAPAN**
**TECNOMAGNETE Ltd.**
1-9-7 Shibaura,
Minato - KU
105-0023 Tokyo
Tel. +81 3 5765 9201
Fax +81 3 5765 9203
infojapan@tecnomagnete.com

**CHINA**
**TECNOMAGNETE R.O.**
Pudong Lujiazui Dong road 161,
SHANGHAI- Room 2110 - PC: 200120
Tel: +86 21 68882110
Fax + 86 21 58822110
info@tecnomagnete.com.cn

• **IT**
**TECNOMAGNETE S.p.A.**
20020 Lainate (MI)
Via Nerviano 31
Tel. +39 02.937.591
Fax +39 02.935.708.57
info@tecnomagnete.com
www.tecnomagnete.com

• **DE**
**TECNOMAGNETE GmbH**
Ohmstraße 4, D - 63225 Langen
Tel. +49 6103 750 730
Fax +49 6103 750 7311

• **JP**
**TECNOMAGNETE Y.K. Ltd.**
Omodaka Building 1F
1-9-7 Shibaura, Minato-ku
105-0023 Tokyo
Tel. +81 (0)3-5765-9201/02
Fax +81 (0)3-5765-9203

• **FR**
**TECNOMAGNETE S.A.R.L.**
52 avenue Saint-Exupéry
01200 Bellegarde-sur-Valserine
Tel. +33.450.560.600
Fax +33.450.560.610

• **US**
**TECNOMAGNETE Inc.**
6655 Allar Drive,
Sterling Hts, MI 48312
Tel. +1 586 276 6001
Fax +1 586 276 6003

• **CN**
**TECNOMAGNETE Shanghai R.O.**
Pudong Lujiazui Dong road 161,
Room 2110 - PC: 200120
Tel. +86 21 68882110
Fax + 86 21 58822110


09QUAD001